Haynes THE BOOK

Automotive Technical DATA BOOK

Click on one of the buttons above to view data for this car. To return to this screen and make another choice, click anywhere on the data screen.

MENU | HELP

Engine and cooling system

		Vanette 1.5 Wide Body (C22) 1987 to 1991
Type		A15S OHV 52kW
Capacity (cm³) / number of cylinders		1488 / 4
Compression ratio / pressure	bar	9.0 / ≥9.8
Oil pressure	bar	[2.9 to 3.9]
Oil temperature	ºC	80
Valve clearance - inlet	mm	0.35 H
Valve clearance - exhaust	mm	0.35 H
Firing order		1-3-4-2
No 1 cylinder position		TCE
Thermostat opening temperature	ºC	82
Radiator cap pressure	bar	0.78 to 0.98

Fuel system

		Vanette 1.5 Wide Body (C22) 1987 to 1991
Idle speed - manual [auto]	rpm	700±50
Fast idle speed - manual [auto]	rpm	2000 to 2500
CO @ idle speed [3000 rpm] - see page VI	%	1.5±0.5
HC @ idle speed [3000 rpm] - see page VI	ppm	≤1200
CO2 @ idle speed [3000 rpm] - see page VI	%	_
O2 @ idle speed [3000 rpm] - see page VI	%	_
Carburettor / fuel injection		Hitachi
Type / ref		DCZ306-28
Main jet / needle		101, 130
Injection pressure	bar	_
Pump pressure	bar	0.20 to 0.27
Octane rating	RON	90[E 91 RON]

Ignition system

		Vanette 1.5 Wide Body (C22) 1987 to 1991
Type		Contact breaker - CIS
Ignition coil		Hanshin H5-13-49
Primary resistance	ohms	1.2 to 1.4
Ballast resistor	ohms	1.6
Voltage - Tmnl 15(+) to earth	V	_
Distributor		Hitachi/Mitsubishi
Points gap (air gap)	mm	0.45 to 0.55
Dwell angle	º (%)	49 to 55
Condenser capacity	µF	0.20 to 0.24
Rotation		Anticlockwise
Ignition timing - basic [static	º Crankshaft @ rpm	7±2 BTDC @ 700±50
V = Vacuum NV = No Vacuum		NV
Total ignition advance	º Crankshaft @ rpm	_
	º Crankshaft @ rpm	_
	º Crankshaft @ rpm	_
Centrifugal check.	º Crankshaft @ rpm	0 @ 1380
	º Crankshaft @ rpm	_
	º Crankshaft @ rpm	22 to 26 @ 4800
Vacuum range check	mbar	140 to 427
Maximum vacuum advance	º Crankshaft	25 to 27
Spark plugs		NGK/Champion
Type		BPR5ES / RN9YC
Electrode gap	mm	0.80 to 0.90

Electrical system

		Vanette 1.5 Wide Body (C22) 1987 to 1991
Battery	V / CC / RC	12 / 30, 50, 60Ah
Alternator voltage / full load current / engine rpm		14.1 to 14.7 / 50, 60 / 2500
Starter motor current / voltage - cranking	A / V	60 / 11.5 (no load)
- locked	A / V	_

Running gear

		Vanette 1.5 Wide Body (C22) 1987 to 1991
Brakes -		
Front (min. friction material thickness)	mm	2.0
Rear (min. friction material thickness)	mm	1.5
Tyres		
Saloon	Size	_
Estate / Van	Size	165x14: 195/70x14
Pressure - front / rear - Saloon	bar	_
- Estate / Van	bar	3.0 / 3.0
Front suspension / wheel alignment		
Toe-in (+) / Toe-out (–)	mm [º]	-1.0 to +3.0
Camber		-30' to +1°
Castor		+35' to 2°5'
King pin inclination		+9° to 10°[1]
Rear suspension / wheel alignment		
Toe-in (+) / Toe-out (–)	mm [º]	_
Camber		_

Torque wrench settings

		Vanette 1.5 Wide Body (C22) 1987 to 1991
Cylinder head - stage 1	Nm	29 to 34
- stage 2	Nm	49 to 54
Cylinder head - stage 3	Nm	69 to 74
- stage 4	Nm	_
Big-end bearings	Nm	31 to 37
Main bearings	Nm	49 to 59
Clutch cover	Nm	22 to 29
Flywheel [driveplate]	Nm	78 to 88
Front hubs	Nm	265 to 353
Rear hubs	Nm	_
Wheel nuts / bolts	Nm	98 to 118
Spark plugs	Nm	20 to 29

Capacities

		Vanette 1.5 Wide Body (C22) 1987 to 1991
Engine oil & filter	litres	3.1
Gearbox - 4-speed [5-speed]	litres	1.2
Automatic transmission - refill	litres	_
Final drive	litres	1.0. 90 ▶: 1.3
Cooling system	litres	5.0
Fuel tank	litres	55

Notes and Illustrations

[1]90 ▶: +8°45' to 10°15'

1: Idle speed 2: CO / Mixture

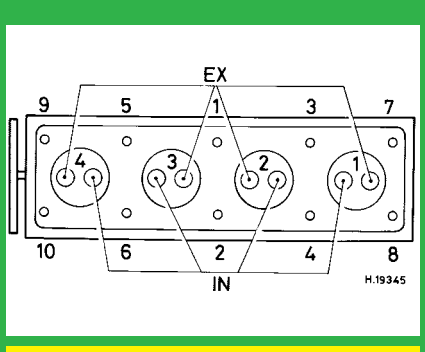

1488 cm³

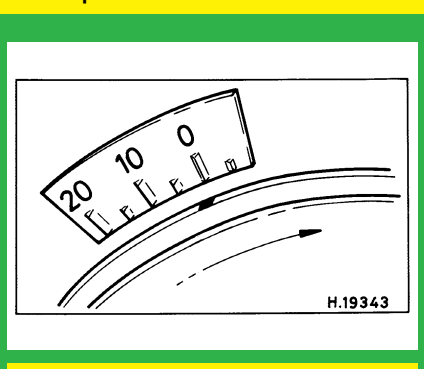

1488 cm³

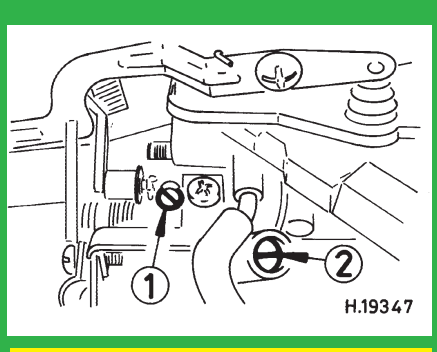

Hitachi DCZ