Haynes THE BOOK

Automotive Technical DATA BOOK

Click on one of the buttons above to view data for this car. To return to this screen and make another choice, click anywhere on the data screen.

MENU | HELP

Engine and cooling system

		Micra 1.2 (K10) 1989 to 1992
Type		MA12S SOHC 45kW
Capacity (cm³) / number of cylinders		1235 / 4
Compression ratio / pressure	bar	9.0 / ≥9.8
Oil pressure	bar	[2.9]
Oil temperature	ºC	_
Valve clearance - inlet	mm	0.25 H
Valve clearance - exhaust	mm	0.30 H
Firing order		1-3-4-2
No 1 cylinder position		TBE
Thermostat opening temperature	ºC	88
Radiator cap pressure	bar	0.90

Fuel system

		Micra 1.2 (K10) 1989 to 1992
Idle speed - manual [auto]	rpm	800±50. A/C: 850±50
Fast idle speed - manual [auto]	rpm	1700 to 2100 [1800 to 2200]
CO @ idle speed [3000 rpm] - see page VI	%	1.5±0.5
HC @ idle speed [3000 rpm] - see page VI	ppm	≤1200
CO2 @ idle speed [3000 rpm] - see page VI	%	_
O2 @ idle speed [3000 rpm] - see page VI	%	_
Carburettor / fuel injection		Hitachi
Type / ref		DCZ306-94 [AT: -95]
Main jet / needle		93, 130
Injection pressure	bar	_
Pump pressure	bar	0.20 to 0.27
Octane rating	RON	91[E 91 RON]

Ignition system

		Micra 1.2 (K10) 1989 to 1992
Type		Electronic
Ignition coil		Mitsubishi. Hitachi
Primary resistance	ohms	1.0 to 1.2
Ballast resistor	ohms	_
Voltage - Tmnl 15(+) to earth	V	_
Distributor		Hitachi/Mitsubishi
Points gap (air gap)	mm	[0.30 to 0.45]
Dwell angle	º (%)	_
Condenser capacity	µF	_
Rotation		Anticlockwise
Ignition timing - basic [static	º Crankshaft @ rpm	0±1 BTDC @ idle
V = Vacuum NV = No Vacuum		NV
Total ignition advance	º Crankshaft @ rpm	10±5 BTDC @ idle
	º Crankshaft @ rpm	_
	º Crankshaft @ rpm	_
Centrifugal check.	º Crankshaft @ rpm	0 @ 900 to 1300
	º Crankshaft @ rpm	10 @ 1700 to 2300
	º Crankshaft @ rpm	12 to 16 @ 2400
Vacuum range check	mbar	107 to 267
Maximum vacuum advance	º Crankshaft	12
Spark plugs		NGK/Champion
Type		BPR5ES / RN9YC
Electrode gap	mm	0.80 to 0.90

Electrical system

		Micra 1.2 (K10) 1989 to 1992
Battery	V / CC / RC	12 / 45Ah
Alternator voltage / full load current / engine rpm		14.1 to 14.7 / _ / 2500
Starter motor current / voltage - cranking	A / V	55 [AT: 65] / 11.5 (no load)
- locked	A / V	_

Running gear

		Micra 1.2 (K10) 1989 to 1992
Brakes -		
Front (min. friction material thickness)	mm	2.0
Rear (min. friction material thickness)	mm	1.5
Tyres		
Saloon	Size	155/70x13: 175/60x13
Estate / Van	Size	_
Pressure - front / rear - Saloon	bar	2.1 / 2.2
- Estate / Van	bar	_
Front suspension / wheel alignment		
Toe-in (+) / Toe-out (–)	mm [º]	+2.0 to 4.0
Camber		-25' to +1°5' N/A
Castor		+1°30' to 3° N/A
King pin inclination		+12°25' to 13°55' N/A
Rear suspension / wheel alignment		
Toe-in (+) / Toe-out (–)	mm [º]	_
Camber		_

Torque wrench settings

		Micra 1.2 (K10) 1989 to 1992
Cylinder head - stage 1	Nm	34 to 39
- stage 2	Nm	64 to 69
Cylinder head - stage 3	Nm	_
- stage 4	Nm	_
Big-end bearings	Nm	29 to 34
Main bearings	Nm	46 to 52 in stages
Clutch cover	Nm	22 to 29
Flywheel [driveplate]	Nm	59 to 69[1]
Front hubs	Nm	147 to 206
Rear hubs	Nm	186 to 255
Wheel nuts / bolts	Nm	78 to 98
Spark plugs	Nm	25 to 29

Capacities

		Micra 1.2 (K10) 1989 to 1992
Engine oil & filter	litres	2.8
Gearbox - 4-speed [5-speed]	litres	2.6
Automatic transmission - refill	litres	6.0
Final drive	litres	WT
Cooling system	litres	5.5
Fuel tank	litres	40

Notes and Illustrations

[1] **[70 to 80]**

1: Idle speed 2: CO / Mixture

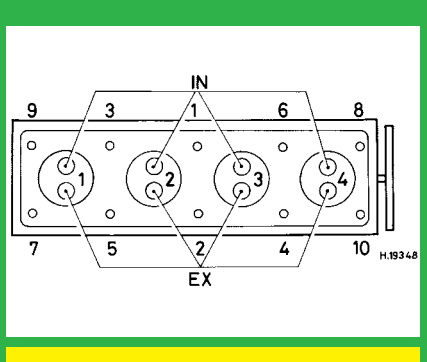

1235 cm³

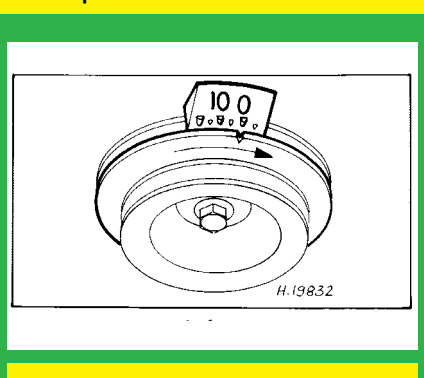

1235 cm³

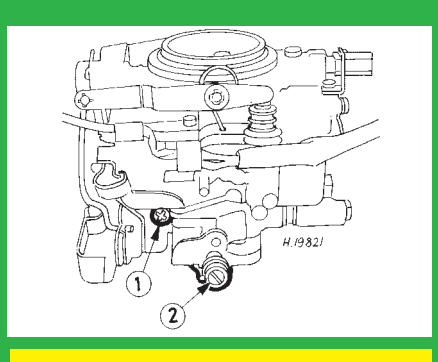

Hitachi DCZ