Haynes THE BOOK

Automotive Technical DATA BOOK

Click on one of the buttons above to view data for this car. To return to this screen and make another choice, click anywhere on the data screen.

MENU | HELP

Engine and cooling system — Colt, Lancer 1600 GTi-16V — 1988 to 1990

Type		4G61-DOHC
Capacity (cm³) / number of cylinders		1596 / 4
Compression ratio / pressure	bar	9.4 / 10.4
Oil pressure	bar	_
Oil temperature	ºC	_
Valve clearance - inlet	mm	0: Hyd.
Valve clearance - exhaust	mm	0: Hyd.
Firing order		1-3-4-2
No 1 cylinder position		TBE
Thermostat opening temperature	ºC	82
Radiator cap pressure	bar	0.76 to 1.04

Fuel system — Colt, Lancer 1600 GTi-16V — 1988 to 1990

Idle speed - manual [auto]	rpm	850±100 N/A
Fast idle speed - manual [auto]	rpm	_
CO @ idle speed [3000 rpm] - see page VI	%	1.0±0.5
HC @ idle speed [3000 rpm] - see page VI	ppm	≤1200
CO2 @ idle speed [3000 rpm] - see page VI	%	_
O2 @ idle speed [3000 rpm] - see page VI	%	_
Carburettor / fuel injection		Mitsubishi
Type / ref		MPI. AC54-200 / 300
Main jet / needle		_
Injection pressure	bar	2.6
Pump pressure	bar	3.2 to 3.5
Octane rating	RON	98[E 95 RON]

Ignition system — Colt, Lancer 1600 GTi-16V — 1988 to 1990

Type		Electronic
Ignition coil		F-089
Primary resistance	ohms	0.77 to 0.95
Ballast resistor	ohms	_
Voltage - Tmnl 15(+) to earth	V	_
Distributor		Mitsubishi
Points gap (air gap)	mm	_
Dwell angle	º (%)	_
Condenser capacity	µF	_
Rotation		_
Ignition timing - basic [static	º Crankshaft @ rpm	5±2 BTDC @ idle
V = Vacuum NV = No Vacuum		NV
Total ignition advance	º Crankshaft @ rpm	_
	º Crankshaft @ rpm	_
	º Crankshaft @ rpm	_
Centrifugal check.	º Crankshaft @ rpm	Electronic control
	º Crankshaft @ rpm	_
	º Crankshaft @ rpm	_
Vacuum range check	mbar	Electronic control
Maximum vacuum advance	º Crankshaft	_
Spark plugs		NGK/Champion
Type		BPR6ES / RN7YC
Electrode gap	mm	0.70 to 0.80

Electrical system — Colt, Lancer 1600 GTi-16V — 1988 to 1990

Battery	V / CC / RC	12 / 101 / 348
Alternator voltage / full load current / engine rpm		13.4 to 14.9 / _ / 2500
Starter motor current / voltage - cranking	A / V	_
- locked	A / V	_

Running gear — Colt, Lancer 1600 GTi-16V — 1988 to 1990

Brakes -		
Front (min. friction material thickness)	mm	2.0
Rear (min. friction material thickness)	mm	2.0
Tyres		
Saloon	Size	185/60x14: 195/60x14
Estate / Van	Size	_
Pressure - front / rear - Saloon	bar	2.0 / 2.0
- Estate / Van	bar	_
Front suspension / wheel alignment		
Toe-in (+) / Toe-out (–)	mm [º]	0±1.5
Camber		0±30'
Castor		+2°20'±30'
King pin inclination		+12°30'
Rear suspension / wheel alignment		
Toe-in (+) / Toe-out (–)	mm [º]	0±2.25 PW
Camber		-40'±35'

Torque wrench settings — Colt, Lancer 1600 GTi-16V — 1988 to 1990

Cylinder head - stage 1	Nm	90 to 100 C
- stage 2	Nm	100 to 110 H
Cylinder head - stage 3	Nm	_
- stage 4	Nm	_
Big-end bearings	Nm	50 to 53
Main bearings	Nm	65 to 70
Clutch cover	Nm	15 to 22
Flywheel [driveplate]	Nm	130 to 140
Front hubs	Nm	200 to 260
Rear hubs	Nm	150 to 200
Wheel nuts / bolts	Nm	90 to 110
Spark plugs	Nm	20 to 30

Capacities — Colt, Lancer 1600 GTi-16V — 1988 to 1990

Engine oil & filter	litres	4.4
Gearbox - 4-speed [5-speed]	litres	1.8
Automatic transmission - refill	litres	_
Final drive	litres	WT
Cooling system	litres	6.0
Fuel tank	litres	50

Notes and Illustrations

1: Idle speed 2: CO / Mixture

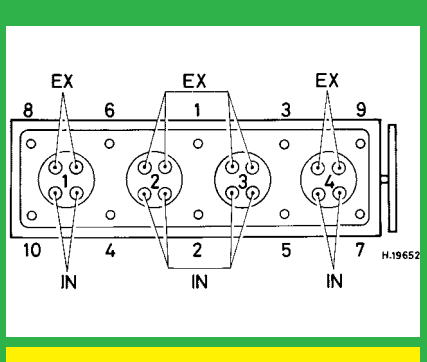

1596 cm³, 16V

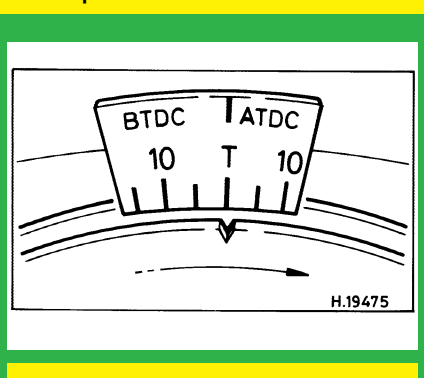

1596 cm³

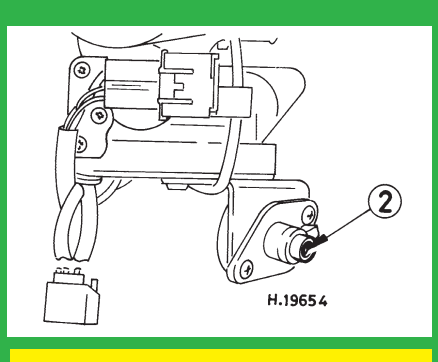

EFi