Haynes THE BOOK

Automotive Technical DATA BOOK

Click on one of the buttons above to view data for this car. To return to this screen and make another choice, click anywhere on the data screen.

MENU | HELP

Engine and cooling system

		1500, Riva & Van 1976 to 1992
Type		2103
Capacity (cm³) / number of cylinders		1452 / 4
Compression ratio / pressure	bar	8.5 / 11.7
Oil pressure	bar	[3.5 to 4.4]
Oil temperature	ºC	85
Valve clearance - inlet	mm	0.15
Valve clearance - exhaust	mm	0.15
Firing order		1-3-4-2
No 1 cylinder position		F
Thermostat opening temperature	ºC	80 or 83
Radiator cap pressure	bar	0.50

Fuel system

		1500, Riva & Van 1976 to 1992
Idle speed - manual [auto]	rpm	850 to 900
Fast idle speed - manual [auto]	rpm	_
CO @ idle speed [3000 rpm] - see page VI	%	1.0 to 1.5
HC @ idle speed [3000 rpm] - see page VI	ppm	≤300
CO2 @ idle speed [3000 rpm] - see page VI	%	_
O2 @ idle speed [3000 rpm] - see page VI	%	_
Carburettor / fuel injection		_
Type / ref		2103 or 2107-1107010-02
Main jet / needle		2103: 130, 140. 2105: 112, 150
Injection pressure	bar	_
Pump pressure	bar	0.23 to 0.30
Octane rating	RON	93[E 95 RON]

Ignition system

		1500, Riva & Van 1976 to 1992
Type		Contact breaker - CIS
Ignition coil		_
Primary resistance	ohms	3.1 to 3.3
Ballast resistor	ohms	_
Voltage - Tmnl 15(+) to earth	V	_
Distributor		_
Points gap (air gap)	mm	0.40±0.03
Dwell angle	º (%)	55±3
Condenser capacity	µF	0.20 to 0.25
Rotation		Clockwise
Ignition timing - basic [static	º Crankshaft @ rpm	[3 to 5 BTDC]
V = Vacuum NV = No Vacuum		_
Total ignition advance	º Crankshaft @ rpm	_
	º Crankshaft @ rpm	_
	º Crankshaft @ rpm	_
Centrifugal check.	º Crankshaft @ rpm	0 @ 800 to 1200
	º Crankshaft @ rpm	16 to 20 @ 3000
	º Crankshaft @ rpm	29 to 33 @ 5500
Vacuum range check	mbar	107 to 213
Maximum vacuum advance	º Crankshaft	10 to 14
Spark plugs		Champion
Type		RN9YCC
Electrode gap	mm	0.60

Electrical system

		1500, Riva & Van 1976 to 1992
Battery	V / CC / RC	12 / 255 / 55Ah
Alternator voltage / full load current / engine rpm		13.9 to 14.5 / 45, 55 / 3000
Starter motor current / voltage - cranking	A / V	_
- locked	A / V	500 / 6.5

Running gear

		1500, Riva & Van 1976 to 1992
Brakes -		
Front (min. friction material thickness)	mm	1.5
Rear (min. friction material thickness)	mm	2.0
Tyres		
Saloon	Size	165x13: 175x13
Estate / Van	Size	165x13: 175x13: 175/70x13
Pressure - front / rear - Saloon	bar	1.6 / 1.9
- Estate / Van	bar	1.7 / 2.0
Front suspension / wheel alignment		
Toe-in (+) / Toe-out (–)	mm [º]	+4.0±1.0
Camber		+5'±20'
Castor		+3°30'±30'
King pin inclination		+6°11'
Rear suspension / wheel alignment		
Toe-in (+) / Toe-out (–)	mm [º]	_
Camber		_

Torque wrench settings

		1500, Riva & Van 1976 to 1992
Cylinder head - stage 1	Nm	39. Bolt 11: 15
- stage 2	Nm	113. Bolt 11: 37
Cylinder head - stage 3	Nm	_
- stage 4	Nm	_
Big-end bearings	Nm	51
Main bearings	Nm	80
Clutch cover	Nm	30
Flywheel [driveplate]	Nm	83
Front hubs	Nm	WSM
Rear hubs	Nm	_
Wheel nuts / bolts	Nm	69
Spark plugs	Nm	37

Capacities

		1500, Riva & Van 1976 to 1992
Engine oil & filter	litres	3.75
Gearbox - 4-speed [5-speed]	litres	1.4
Automatic transmission - refill	litres	_
Final drive	litres	1.3
Cooling system	litres	9.6
Fuel tank	litres	39. Est/Van: 45

Notes and Illustrations

1: Idle speed 2: CO / Mixture

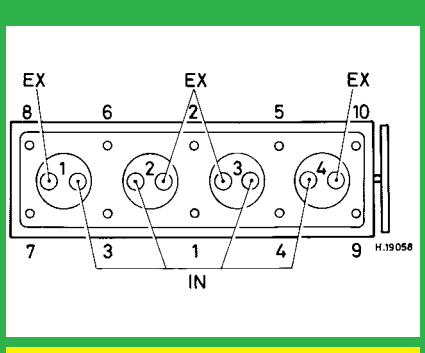

1452 cm³

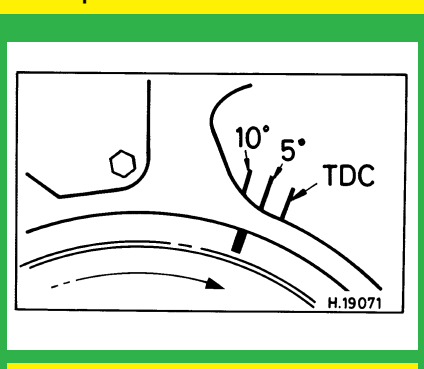

1452 cm³

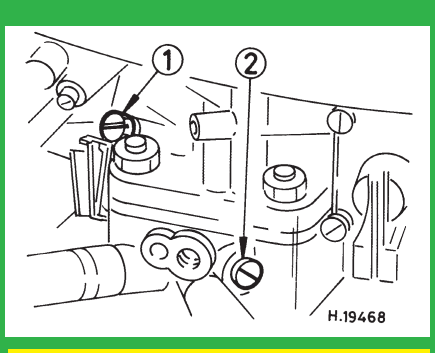

2103 / 2107-1107010-02, alternative

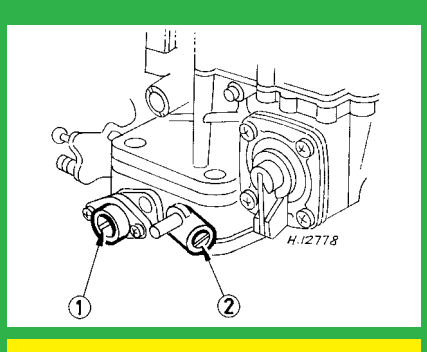

2103 / 2107-1107010-02