Haynes THE BOOK

Automotive Technical

DATA BOOK

Click on one of the buttons above to view data for this car. To return to this screen and make another choice, click anywhere on the data screen.

MENU | HELP

Engine and cooling system

Pony 1.5 1985 to 1990

Type		G4AJ
Capacity (cm³) / number of cylinders		1468 / 4
Compression ratio / pressure	bar	9.5 / _
Oil pressure	bar	1.5
Oil temperature	ºC	_
Valve clearance - inlet	mm	0.15 H
Valve clearance - exhaust	mm	0.25 H
Firing order		1-3-4-2
No 1 cylinder position		TBE
Thermostat opening temperature	ºC	82
Radiator cap pressure	bar	0.78 to 0.98

Fuel system

Pony 1.5 1985 to 1990

Idle speed - manual [auto]	rpm	750±30 [850±30]
Fast idle speed - manual [auto]	rpm	_
CO @ idle speed [3000 rpm] - see page VI	%	1.5
HC @ idle speed [3000 rpm] - see page VI	ppm	≤1200
CO2 @ idle speed [3000 rpm] - see page VI	%	_
O2 @ idle speed [3000 rpm] - see page VI	%	_
Carburettor / fuel injection		Changwon
Type / ref		2V
Main jet / needle		100, 150
Injection pressure	bar	_
Pump pressure	bar	_
Octane rating	RON	97[E 95 RON]

Ignition system

Pony 1.5 1985 to 1990

Type		Electronic
Ignition coil		Diamond
Primary resistance	ohms	1.08 to 1.32
Ballast resistor	ohms	1.15 to 1.55
Voltage - Tmnl 15(+) to earth	V	_
Distributor		Mitsubishi
Points gap (air gap)	mm	_
Dwell angle	º (%)	_
Condenser capacity	µF	_
Rotation		Clockwise
Ignition timing - basic [static	º Crankshaft @ rpm	3 ATDC @ idle
V = Vacuum NV = No Vacuum		NV
Total ignition advance	º Crankshaft @ rpm	_
	º Crankshaft @ rpm	_
	º Crankshaft @ rpm	_
Centrifugal check.	º Crankshaft @ rpm	0 @ 1000
	º Crankshaft @ rpm	_
	º Crankshaft @ rpm	20 @ 6000
Vacuum range check	mbar	133 to 400
Maximum vacuum advance	º Crankshaft	15
Spark plugs		NGK/Champion
Type		BPR6ES / RN9YC
Electrode gap	mm	0.70 to 0.80

Electrical system

Pony 1.5 1985 to 1990

Battery	V / CC / RC	12 / 350 / 80
Alternator voltage / full load current / engine rpm		14.4 to 15.0 / _ / 2300
Starter motor current / voltage - cranking	A / V	60 / 11.5 (no load)
- locked	A / V	_

Running gear

Pony 1.5 1985 to 1990

Brakes -		
Front (min. friction material thickness)	mm	1.0
Rear (min. friction material thickness)	mm	1.0
Tyres		
Saloon	Size	175/70x13
Estate / Van	Size	_
Pressure - front / rear - Saloon	bar	1.8 / 1.8
- Estate / Van	bar	_
Front suspension / wheel alignment		
Toe-in (+) / Toe-out (–)	mm [º]	-1.0±1.0
Camber		0 to +1°
Castor		+30' to 1°10'
King pin inclination		+12°42'
Rear suspension / wheel alignment		
Toe-in (+) / Toe-out (–)	mm [º]	_
Camber		-10' to -1°20'

Torque wrench settings

Pony 1.5 1985 to 1990

Cylinder head - stage 1	Nm	69 to 73 C
- stage 2	Nm	OR 79 to 83 H
Cylinder head - stage 3	Nm	_
- stage 4	Nm	_
Big-end bearings	Nm	32 to 34
Main bearings	Nm	49 to 53
Clutch cover	Nm	15 to 22
Flywheel [driveplate]	Nm	128 to 137
Front hubs	Nm	200 to 260
Rear hubs	Nm	20 then 0 then 5
Wheel nuts / bolts	Nm	Steel: 70 to 80[1]
Spark plugs	Nm	20 to 30

Capacities

Pony 1.5 1985 to 1990

Engine oil & filter	litres	3.5
Gearbox - 4-speed [5-speed]	litres	2.1
Automatic transmission - refill	litres	5.7
Final drive	litres	WT
Cooling system	litres	6.2
Fuel tank	litres	40

Notes and Illustrations

[1]**Alloy: 80 to 100**

1: Idle speed 2: CO / Mixture

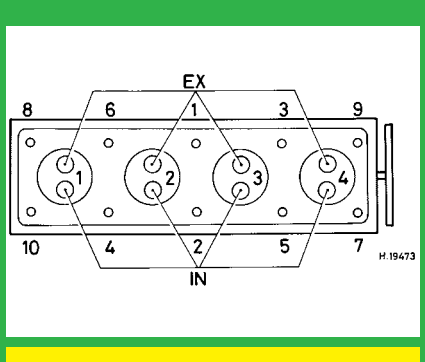

1468 cm³

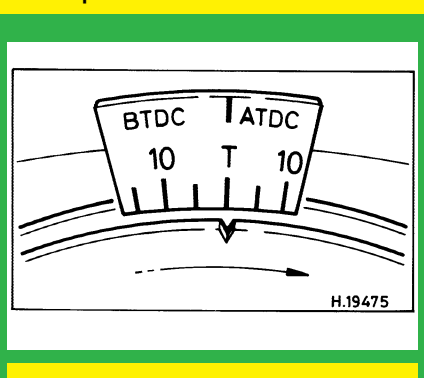

1468 cm³

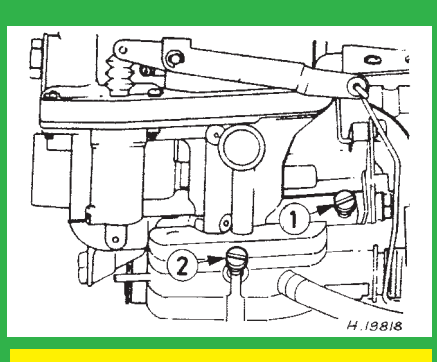

Changwon