Haynes THE BOOK

Automotive Technical

# DATA BOOK

Click on one of the buttons above to view data for this car. To return to this screen and make another choice, click anywhere on the data screen.

MENU | HELP

## Engine and cooling system

| | | Tipo 1.6 & Selecta 1990 to 1992 |
|---|---|---|
| Type | | 159 A3.000 SOHC 62kW |
| Capacity (cm³) / number of cylinders | | 1581 / 4 |
| Compression ratio / pressure | bar | 9.2±0.5 / _ |
| Oil pressure | bar | [3.4 to 4.9] |
| Oil temperature | ºC | 100 |
| Valve clearance - inlet | mm | 0.40±0.05 |
| Valve clearance - exhaust | mm | 0.50±0.05 |
| Firing order | | 1-3-4-2 |
| No 1 cylinder position | | TBE |
| Thermostat opening temperature | ºC | 80 to 84 |
| Radiator cap pressure | bar | 0.98 |

## Fuel system

| | | Tipo 1.6 & Selecta 1990 to 1992 |
|---|---|---|
| Idle speed - manual [auto] | rpm | 850±50 [950±50] |
| Fast idle speed - manual [auto] | rpm | 1300±50 |
| CO @ idle speed [3000 rpm] - see page VI | % | 1.0±0.5 [1.25±0.25] |
| HC @ idle speed [3000 rpm] - see page VI | ppm | ≤1200 |
| CO2 @ idle speed [3000 rpm] - see page VI | % | _ |
| O2 @ idle speed [3000 rpm] - see page VI | % | _ |
| Carburettor / fuel injection | | Weber |
| Type / ref | | 32-34 TLDE 23/151 [24/751] |
| Main jet / needle | | 110, 123 [110, 122] |
| Injection pressure | bar | _ |
| Pump pressure | bar | 0.18 |
| Octane rating | RON | 97[E 95 RON] |

## Ignition system

| | | Tipo 1.6 & Selecta 1990 to 1992 |
|---|---|---|
| Type | | Digiplex 2 |
| Ignition coil | | Marelli BAE 504D |
| Primary resistance | ohms | 0.405 to 0.495 |
| Ballast resistor | ohms | _ |
| Voltage - Tmnl 15(+) to earth | V | _ |
| Distributor | | Marelli |
| Points gap (air gap) | mm | _ |
| Dwell angle | º (%) | _ |
| Condenser capacity | µF | _ |
| Rotation | | _ |
| Ignition timing - basic [static | º Crankshaft @ rpm | 12±1 BTDC @ idle |
| V = Vacuum NV = No Vacuum | | V |
| Total ignition advance | º Crankshaft @ rpm | 8±2 BTDC @ 500 |
| | º Crankshaft @ rpm | 40±2 @ 3000 to 6200 |
| | º Crankshaft @ rpm | _ |
| Centrifugal check. | º Crankshaft @ rpm | Computer control |
| | º Crankshaft @ rpm | _ |
| | º Crankshaft @ rpm | _ |
| Vacuum range check | mbar | Computer control |
| Maximum vacuum advance | º Crankshaft | _ |
| Spark plugs | | Bosch/Champion |
| Type | | WR6D / RN9YC |
| Electrode gap | mm | 0.70 to 0.80 |

## Electrical system

| | | Tipo 1.6 & Selecta 1990 to 1992 |
|---|---|---|
| Battery | V / CC / RC | 12 / 185 / 40 or / 200 / 50Ah |
| Alternator voltage / full load current / engine rpm | | 14.3 to 14.6 / 55, 90 / 3500 |
| Starter motor current / voltage - cranking | A / V | 200 / 9.8 to 10.0 |
| - locked | A / V | 440 / 7.6 |

## Running gear

| | | Tipo 1.6 & Selecta 1990 to 1992 |
|---|---|---|
| **Brakes** - | | |
| Front (min. friction material thickness) | mm | 1.5 |
| Rear (min. friction material thickness) | mm | 1.5 |
| **Tyres** | | |
| Saloon | Size | 165/70x13 |
| Estate / Van | Size | _ |
| Pressure - front / rear - Saloon | bar | 2.0 / 1.9 |
| - Estate / Van | bar | _ |
| **Front suspension / wheel alignment** | | |
| Toe-in (+) / Toe-out (–) | mm [º] | 0±1.0 |
| Camber | | +25'±30' N/A |
| Castor | | +1°40'±30'. PAS: +2°20'±30' |
| King pin inclination | | _ |
| **Rear suspension / wheel alignment** | | |
| Toe-in (+) / Toe-out (–) | mm [º] | -1.0±2.0 |
| Camber | | -1°±30' |

## Torque wrench settings

| | | Tipo 1.6 & Selecta 1990 to 1992 |
|---|---|---|
| Cylinder head - stage 1 | Nm | 20 |
| - stage 2 | Nm | 40 |
| Cylinder head - stage 3 | Nm | + 90° |
| - stage 4 | Nm | + 90° |
| Big-end bearings | Nm | 51 |
| Main bearings | Nm | 80 |
| Clutch cover | Nm | M6: 17. M8: 30 |
| Flywheel [driveplate] | Nm | 83 |
| Front hubs | Nm | 235 |
| Rear hubs | Nm | 320 |
| Wheel nuts / bolts | Nm | 86 |
| Spark plugs | Nm | 25 to 30 |

## Capacities

| | | Tipo 1.6 & Selecta 1990 to 1992 |
|---|---|---|
| Engine oil & filter | litres | 3.8 |
| Gearbox - 4-speed [5-speed] | litres | 1.4 |
| Automatic transmission - refill | litres | 3.5 |
| Final drive | litres | WT |
| Cooling system | litres | 6.5 |
| Fuel tank | litres | 55 |

## Notes and Illustrations

1: Idle speed 2: CO / Mixture

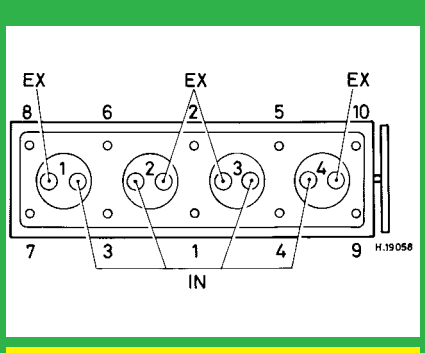


1581 cm³

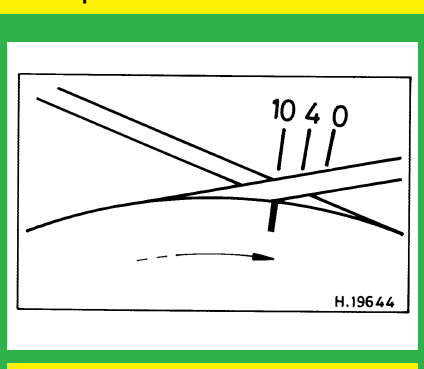


1581 cm³

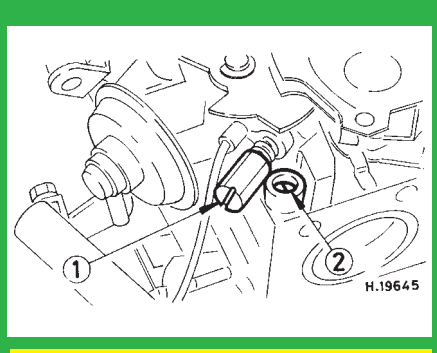


Weber TLDE

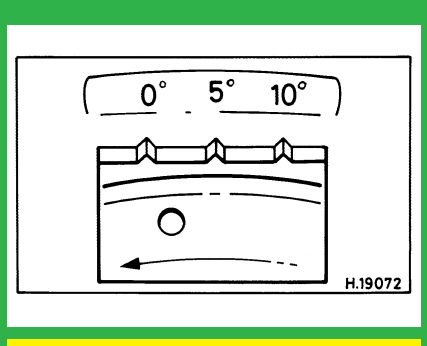


1581 cm³